Manual 340CAP on 340

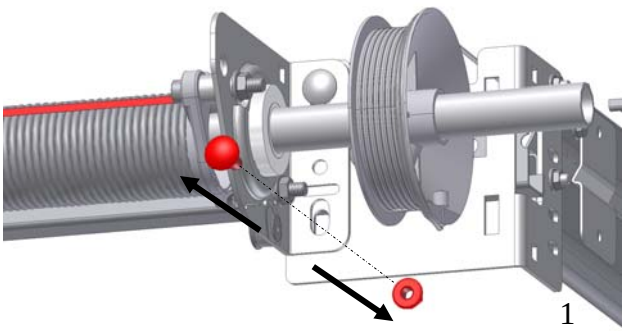

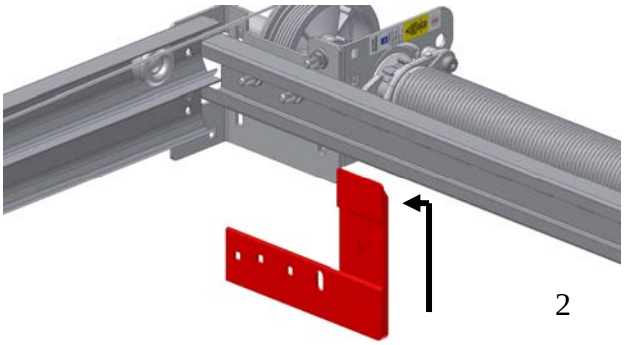

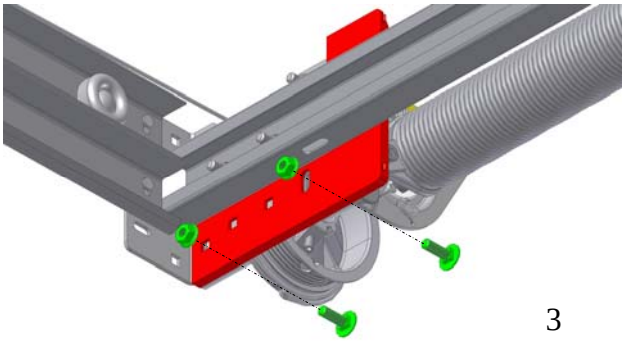

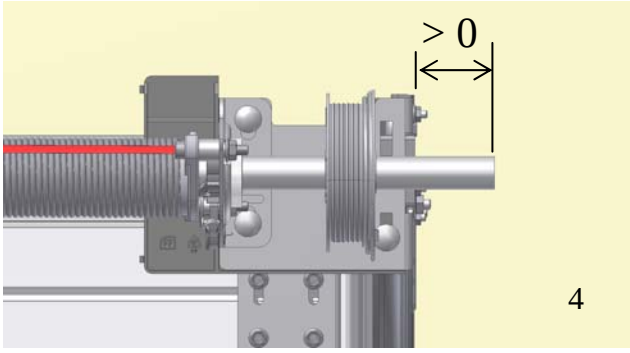

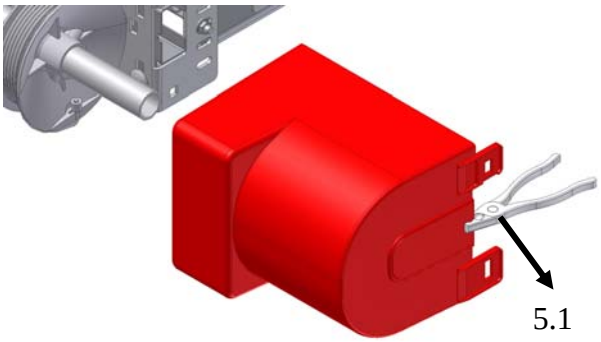

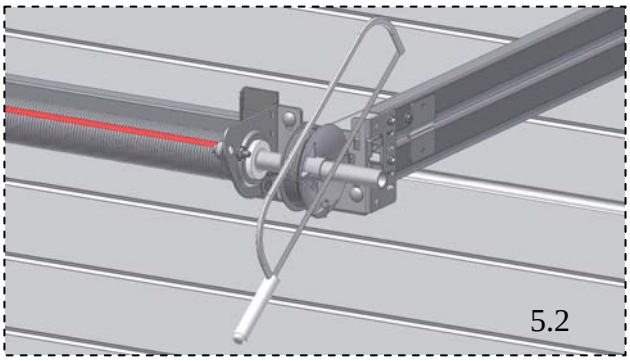

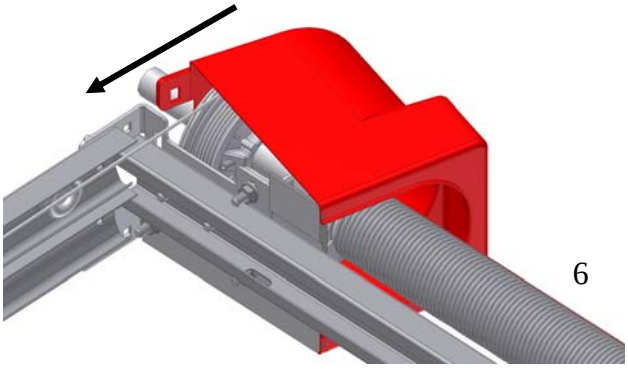

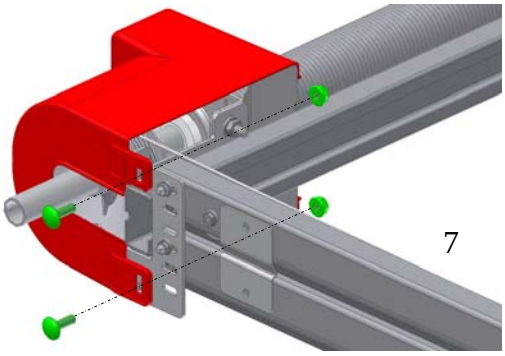

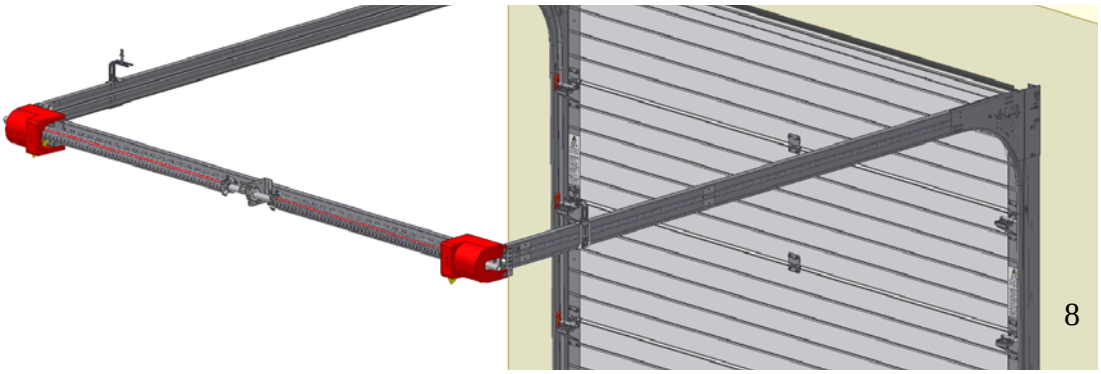

Manual 340CAP on 340C (click)

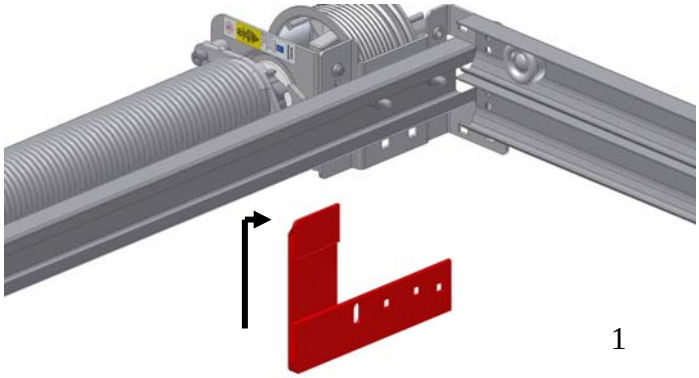

1

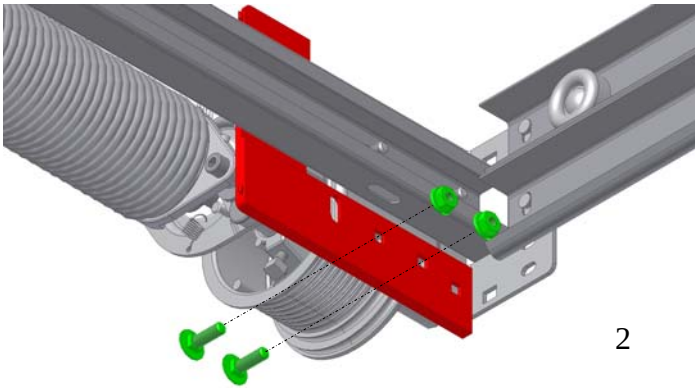

2

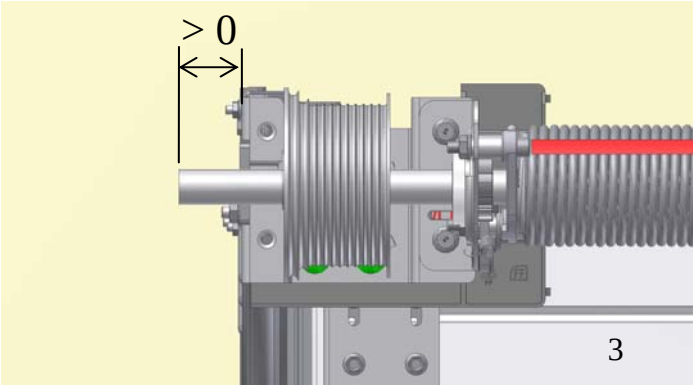

3

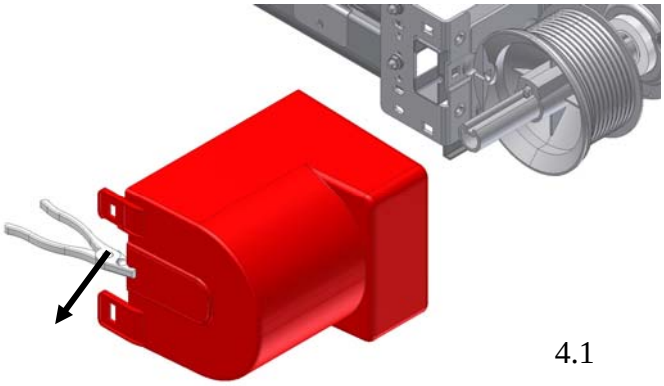

4.1

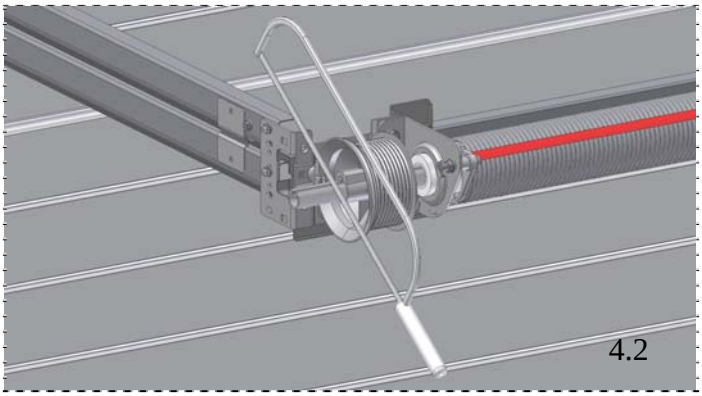

4.2

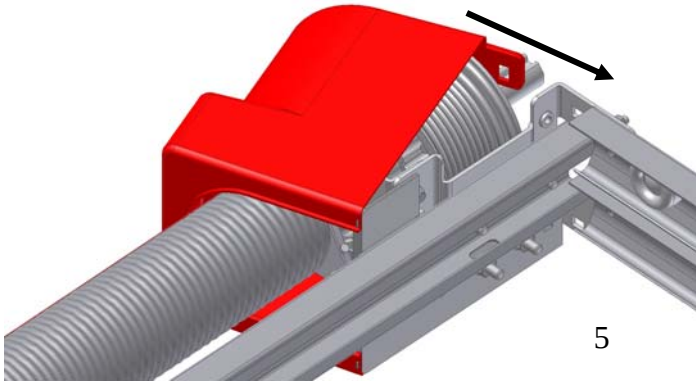

5

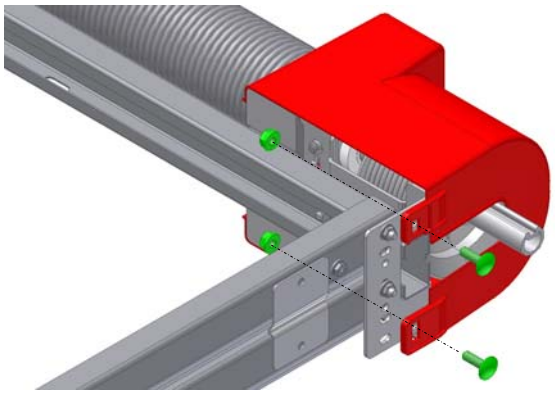

6

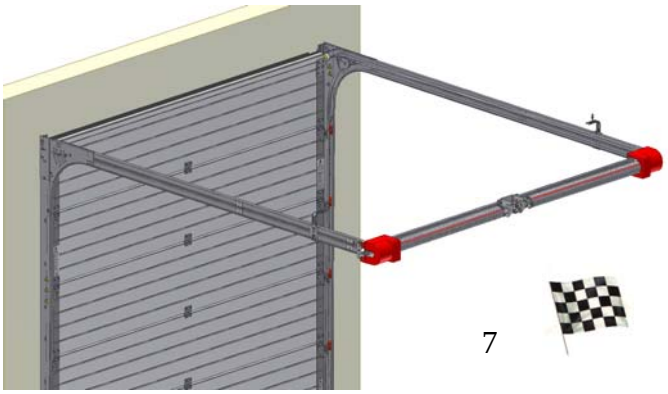

7